A- 102005-51

DUAL VOLTAGE CAPACITOR START NO OVERLOAD SELECT ROTATION

LOW VOLTAGE - C.C.W.

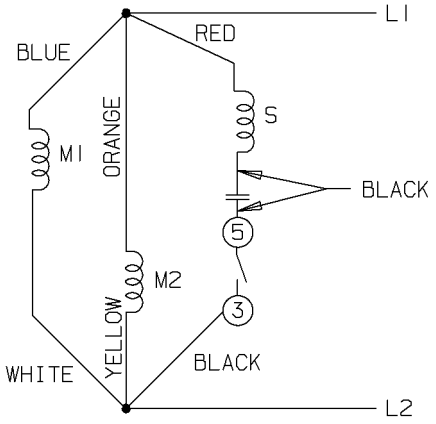

HIGH VOLTAGE - C.C.W.

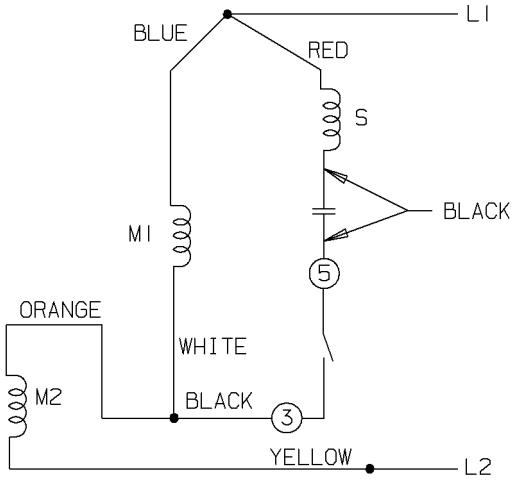

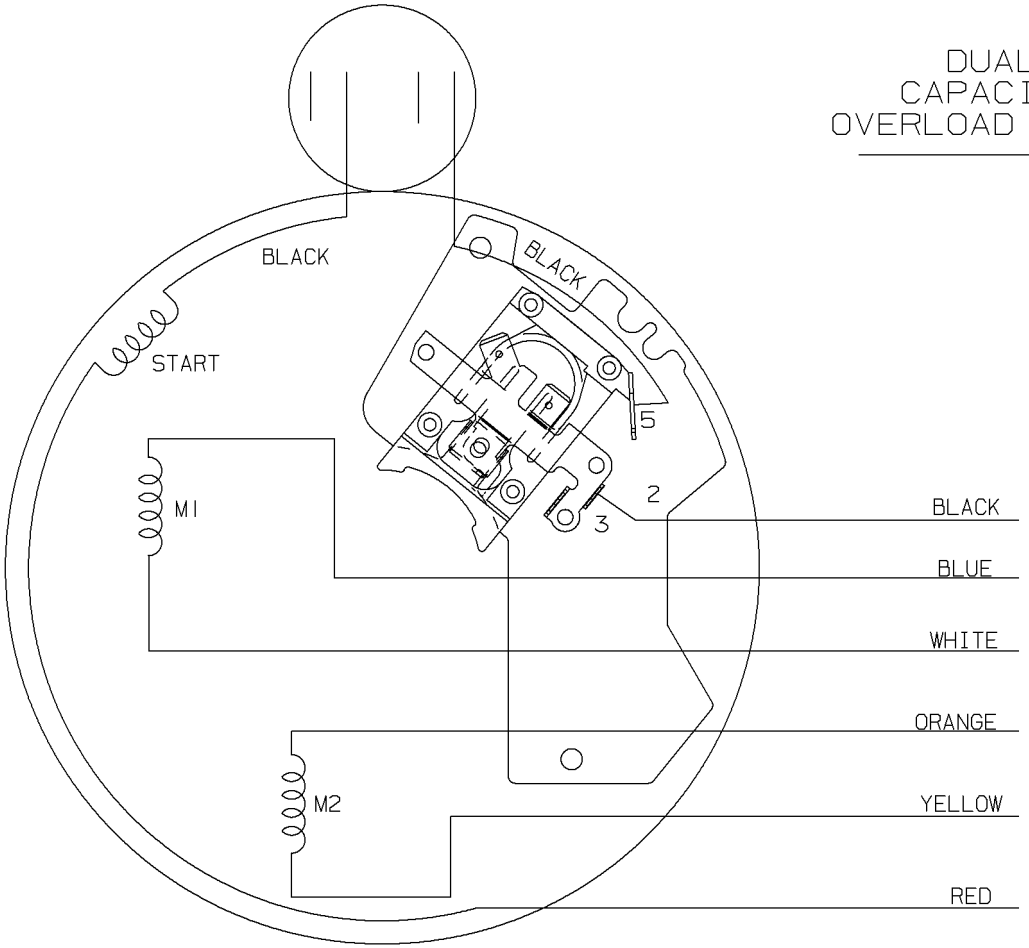

LOW VOLT. - C.C.W. ROT.

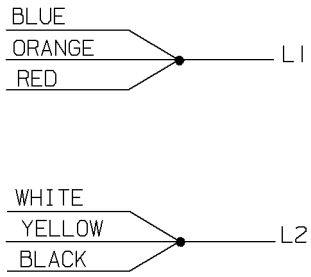

HIGH VOLT. - C.C.W. ROT.

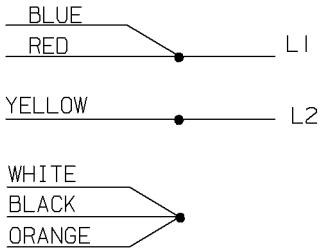

FOR C.W. ROTATION EITHER VOLTAGE INTERCHANGE RED WITH BLACK LEAD

REV	DATE	CHANGE	NAME
5	06-17-1999	REDRAWN	CAV

√ MAX. SURFACE ROUGHNESS UNLESS NOTED OTHERWISE

UNLESS OTHERWISE SPECIFIED DIMENSIONS ARE IN INCHES
TOL. ON XX± XXX± .005 XXXX± .0005 ANGLES±

MATL SPEC

FINISH

REFERENCE DRW.

PART NAME CONNECTION DIAGRAM

MARATHON ELECTRIC
WAUSAU, WISCONSIN 54401

DRAWN BY	CAV	06-18-1999
CHKD BY	ML	06-18-1999
APPD BY	GK	06-18-1999

DRWG NO A- 102005-51

SHOP BOOK | PURCHASED | DISTRIBUTION - WA - LB - WP - LM - BR | CADD FILE NO. 102005-51

8/24/2007 1:06:51 PM -