SS620293

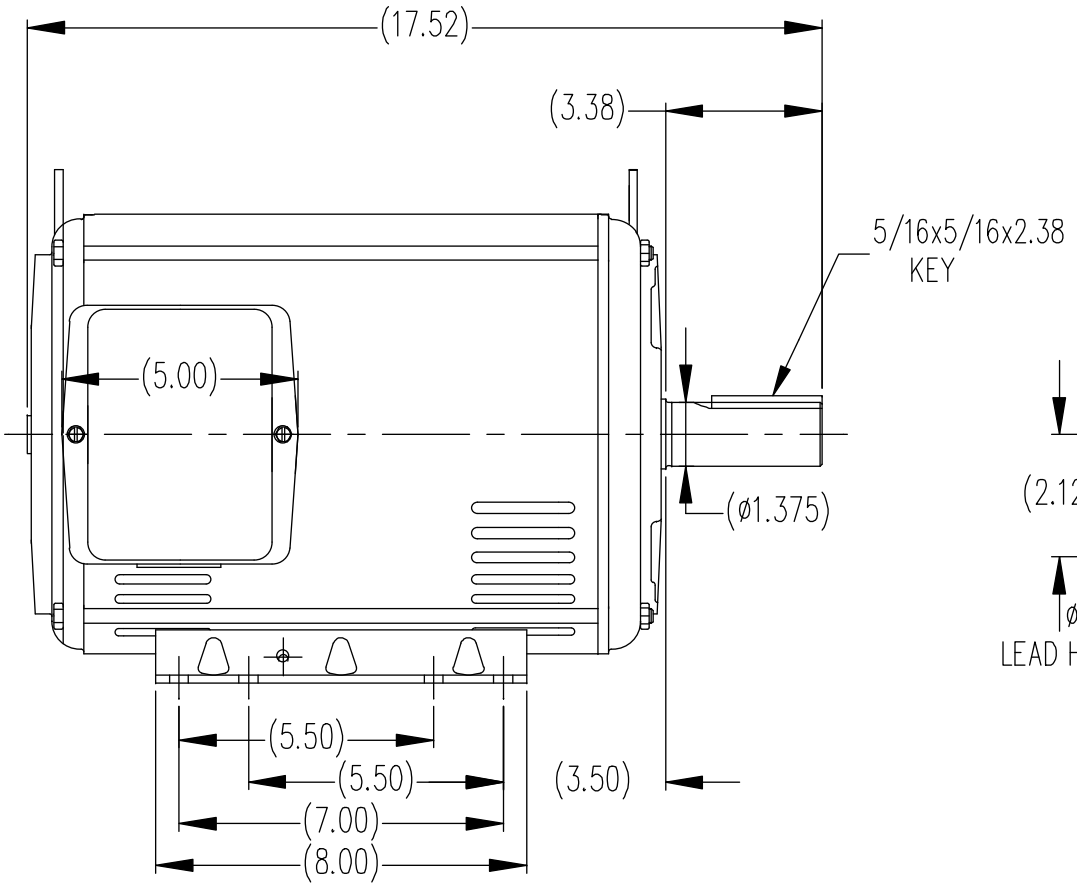

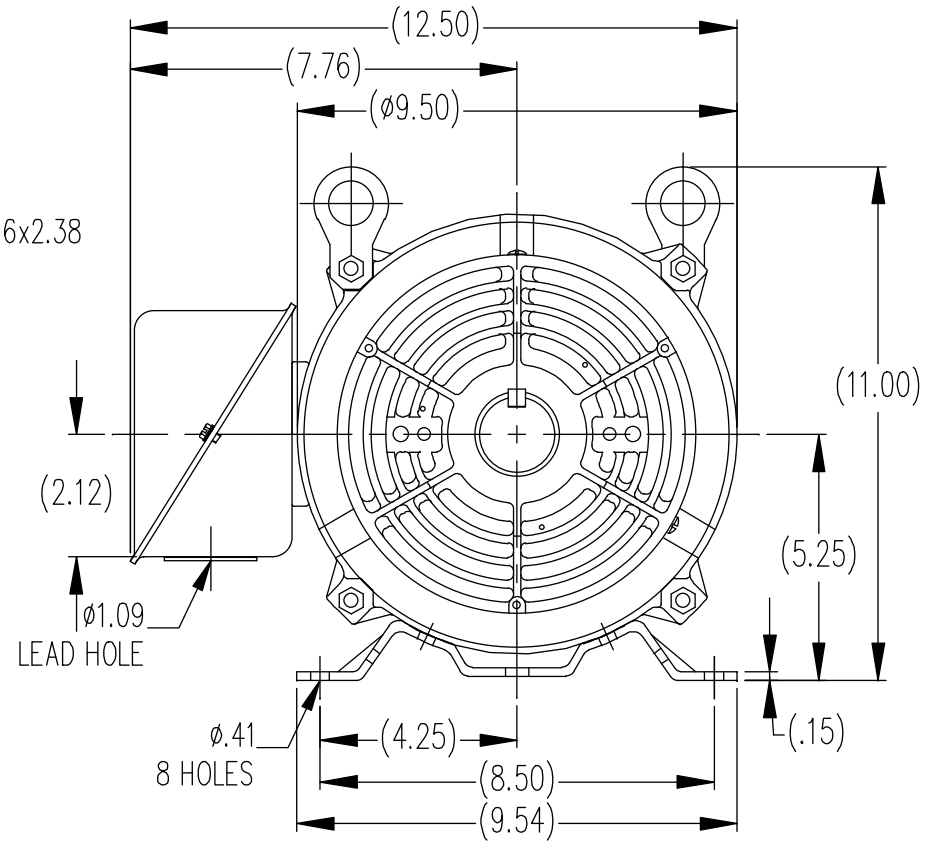

(MAY NOT BE DRAWN TO SCALE)

				TOLERANCES UNLESS SPECIFIED		REGAL - BELOIT CORPORATION	DRAWN	MSG 05-18-010
				DEC.	INCHES		CHK	SB 05-18-2010
				.X	±.1		APPD	MJS 05-18-2010
				.XX	±.03	TITLE OUTLINE	SCALE	1=1
				.XXX	±.005	213/215T FR. – ODP– ROLLED STEEL	REF	
				.XXXX	±.0005	MAT'L.	FMF	HUADA
NO.	REVISION	BY & DATE	CHK	ANG	±1/2	FINISH	PREV	

THIS DRAWING IN DESIGN AND DETAIL IS OUR PROPERTY AND MUST NOT BE USED EXCEPT IN CONNECTION WITH OUR WORK ALL RIGHTS OF DESIGN AND INVENTION ARE RESERVED THIS IS AN ELECTRONICALLY GENERATED DOCUMENT – DO NOT SCALE THIS PRINT

RFP	CAD FILE SS620293	SIZE	DRAWING NO.	REV.
DIST		B	SS620293	