52A105383AA

EITHER ROTATION, DUAL VOLTAGE, TYPE KC OR KH, WITH THERMAL PROTECTION

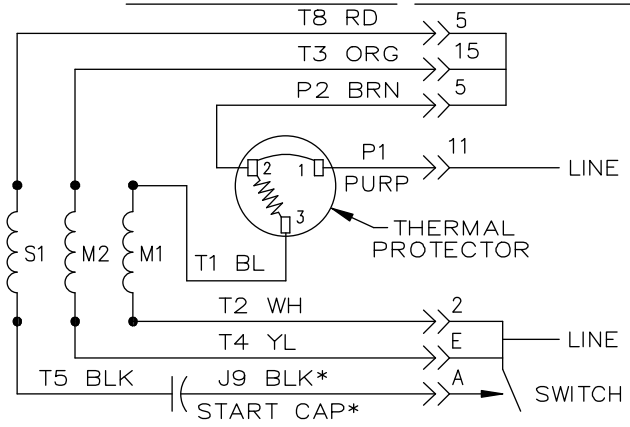

LOW VOLTAGE CONNECTION

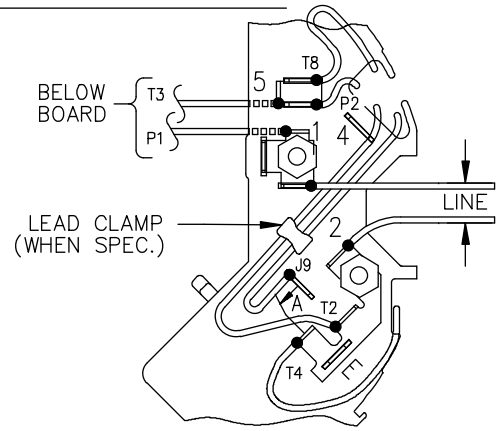

SWITCH BOARD CONNECTION

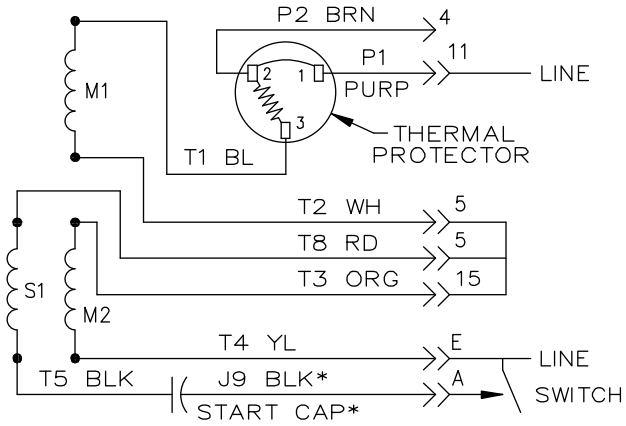

HIGH VOLTAGE CONNECTION

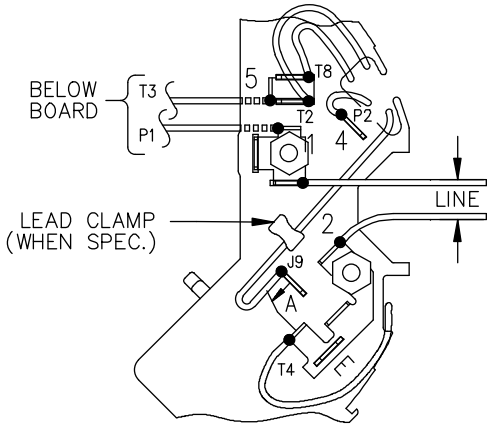

SWITCH BOARD CONNECTION

NOTE #1 – START CAP & J9 WHEN SPECIFIED (*). IF NO CAPACITOR (KH), CONNECT T5 DIRECTLY TO SWITCH (A). WHEN MORE THAN ONE CAPACITOR IS USED, CONNECT IN PARALLEL.

NOTE #2 – TO REVERSE ROTATION, INTER CHANGE RD(T8) AND BLK(J9–KC OR T5–KH) LEADS.

SWITCH REF. – 115D958AB	CONNECTION LABEL	CCW ROTATION: NP52X332051AA
		CW ROTATION: NP52X332051AC

NO.	REVISION	BY & DATE	CHK
5	ADDED CONNECTION LABEL PER ECO–0030779	UD 02/06/13	PKG
4	UPDATED PER IS07–0150	MD 01/23/07	

TOLERANCES UNLESS SPECIFIED

DEC.	INCHES
.X	±0.1
.XX	±0.02
.XXX	±0.005
.XXXX	±0.0005
ANG	±1.0

REGAL BELOIT — REGAL-BELOIT CORPORATION

TITLE: CONNECTION DIAGRAM
30 FRAME SWITCH REDESIGN

MAT'L.

FINISH

DRAWN M.D.P 06/29/87
CHK
APPD M.D.P 03/26/96
SCALE 1=1
REF
FMF
PREV