THIRD ANGLE PROJECTION

REVISIONS			
REV.	DESCRIPTION	DATE	APPROVED
6	UPDATED FORMAT	12/01/05	MAM

EITHER ROTATION-SINGLE VOLTAGE-TYPE KC OR KH-WITH THERMAL PROTECTOR

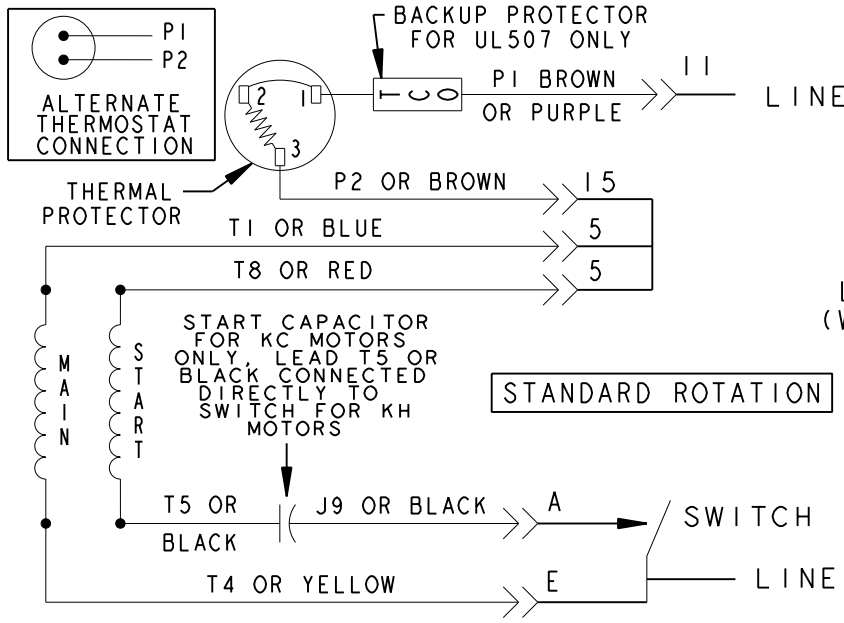

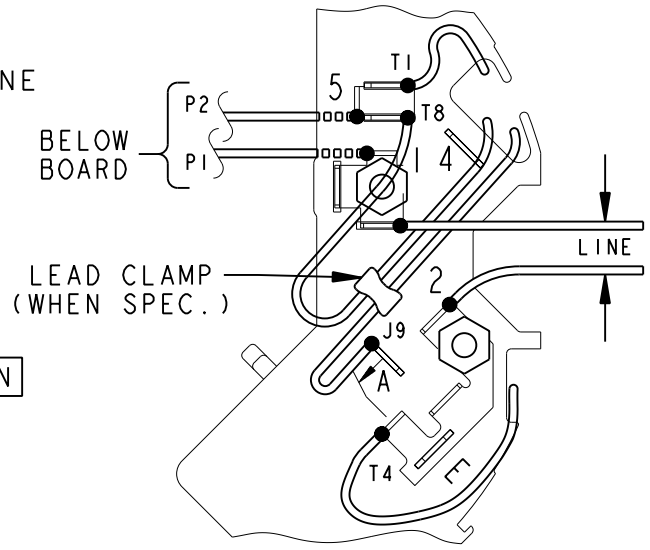

SWITCH BOARD CONNECTION

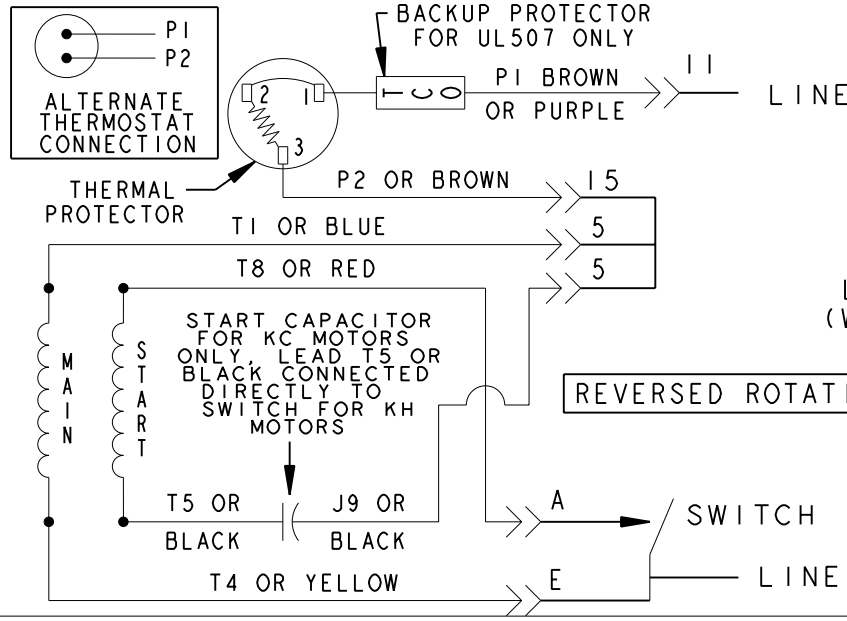

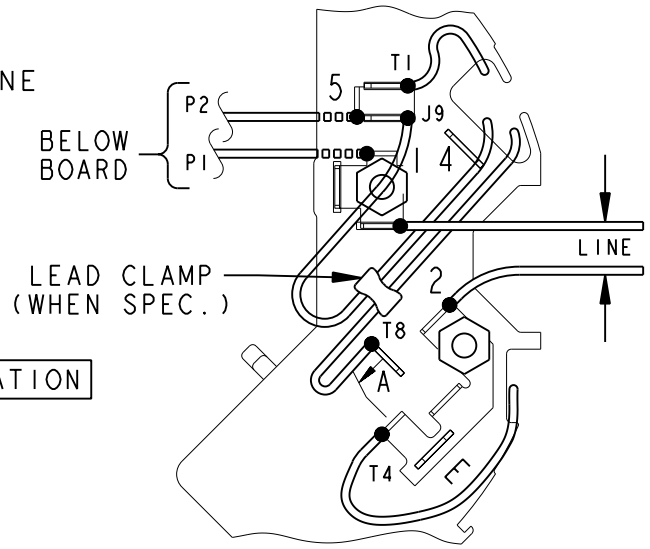

SWITCH BOARD CONNECTION

NOTE #1 - TO REVERSE ROTATION INTERTCHANGE RED (T8) AND BLACK (J9-KC OR T5-KH) LEADS.
NOTE #2 - WHEN MORE THAN ONE CAPACITOR IS USED CONNECT IN PARALLEL.

SWITCH (C) - 115D958AB	REF. DIAG. - 121A851	CONN. LABEL - 52X332048

SIGNATURES		DATE
MODEL	M.D.PAPE	06/29/87
DETAIL	.	.
CHECKED	.	.
ENGRG	.	.
MFG	.	.
QUALITY	.	.
ISSUED	M.D.P.	03/08/00

FOR ADDITIONAL INFO REFER TO:
APPLIED PRACTICES .
DIMENSIONS ARE IN INCHES
MATERIAL .
SOLID MODEL: 52A105379AA

REGAL BELOIT — REGAL-BELOIT CORPORATION

TITLE **CONNECTION DIAGRAM**

.

FMF - 30 FR SWITCH REDESIGN

SIZE	DRAWING	REV
A	52A105379AA	6

SCALE: 1.000 | REF. No: . | SHEET 1 OF 1

SHEET 1 | REV 6 | 52A105379AA | DRAWING NO. | SIZE A